MODELO-ACC-80/AX-80

SERIE-500

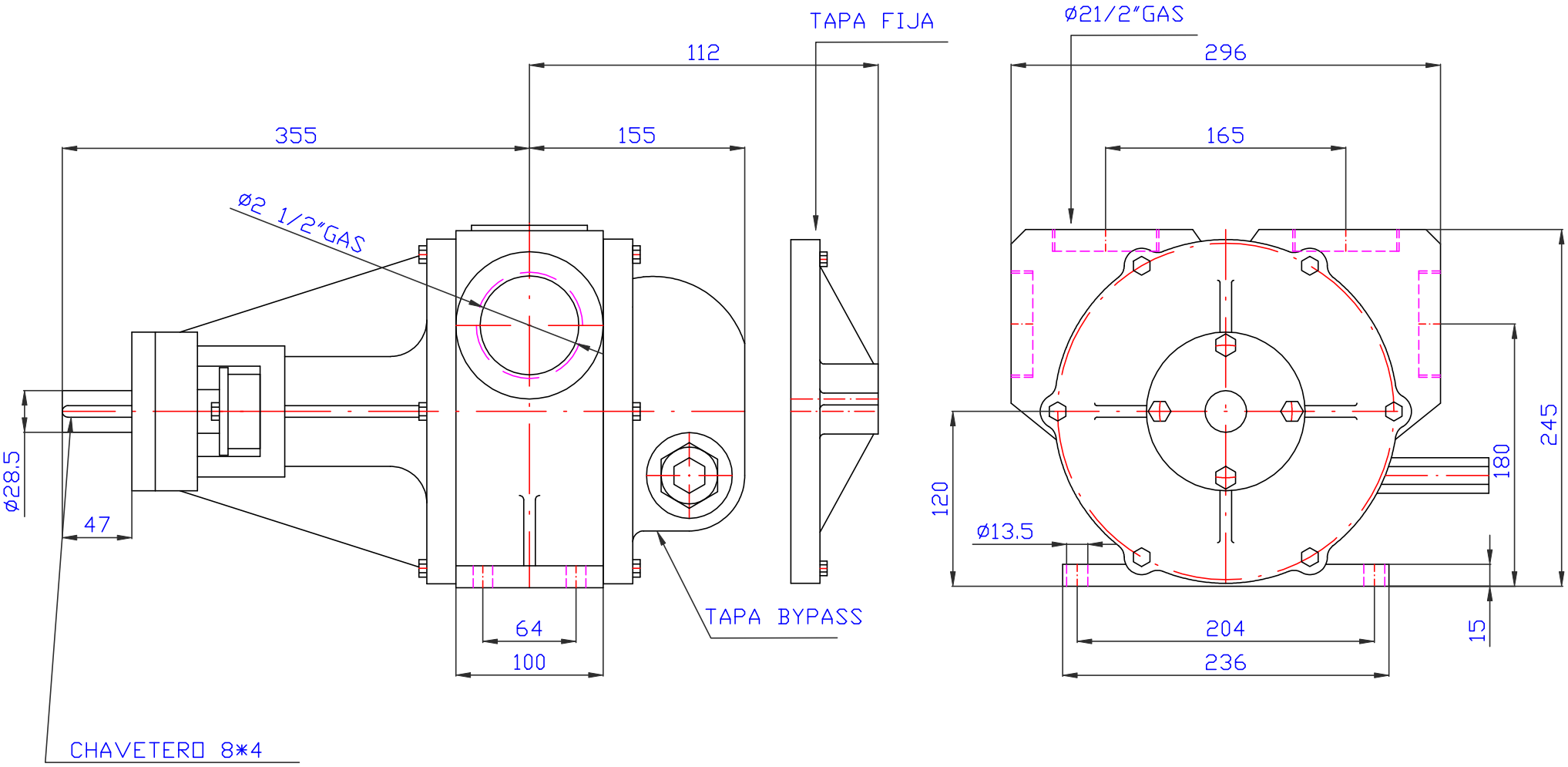

BOMBAS TRIEF,S.L.